Broadcast & Pro-Audio Products

UADC-1

Utility Analog Digital Converter / Switch

The ATI UADC-1 Utility Analog-Digital Converter gives you professional quality 24-bit A-to-D conversion, along with seamless AES audio path insertion and interruption functions. The UADC-1 may be used as a standalone high quality A/D converter or to interrupt an AES stream and insert an analog input via remote control, making it a perfect companion for analog EAS encoders / decoders.

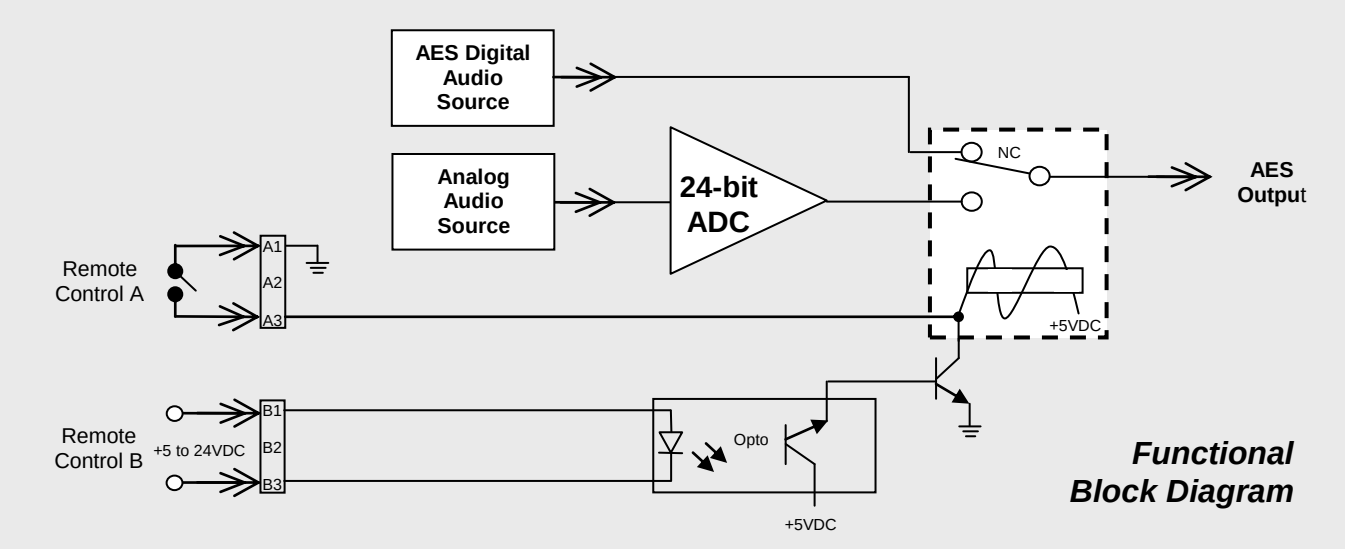

Product Features

- **Balanced and Unbalanced Stereo Analog Inputs**
- **AES Input - AES Output**
- **High Performance 108dB Noise Floor**
- **Seamless Remote Control Dry : Contact Closure or Wet : 5 – 24VDC**
- **UL approved +24VDC External Power Supply**

The UADC-1 is equipped for failsafe operation with relay bypass if power is lost. The A/D converter is shipped to provide broadcast standard 44.1kHz sample rates, with 32kHz or 48kHz sampling selectable via internal jumpers.

Audio Technologies Inc. | 223 Peppermill Road | West Berlin, NJ USA 08091
Phone: 856-626-3480 | Fax: 856-504-0220 | email: sales@atiaudio.com | www.ATIaudio.com

Specifications

Analog Input Level	**-10dBu to +24dBu** **+4dBu analog input provides –20dBfs AES output**
Analog Input Impedance	**10KΩ balanced**
Frequency Response	**10 – 20kHz, +/-0.5dB**
Distortion	**<.01% THD / IMD**
Noise	**<108dB EIN**
AES Output Impedance	**110Ω, balanced from analog / A-D input; passive when AES input is active**
Power Requirements	**24VDC, 600mA, wall transformer, supplied**
Size	**1/2 rack space**
Weight	**6.0 lbs (2.7kg)**

Connections / Options

L/R Analog Inputs	**Hi-Z, active balanced on XLR connectors. Unbalanced analog on L and R terminals of the plug-in Euroblock connector; G is for unbalanced shield.**
AES Input	**Main AES source input on XLR.**
AES Output	**AES output on XLR has either AES input audio or A-D derived AES output from L/R analog input.**
Remote Control	**Operates from a Dry external contact closure or Wet via an opto-isolated 5 – 24VDC input (6mA at 5VDC).**
Options	**21075-501 Rack Mounting Shelf, holds up to two units** **21098-501 1/2 RU Blank Panel** **WA100-2 220VAC 50-60Hz CE-approved External Power Supply**

Copyright 2009 ATI Group
Specifications subject to change without notice.

Audio Technologies Inc. | 223 Peppermill Road | West Berlin, NJ USA 08091
Phone: 856-626-3480 | Fax: 856-504-0220 | email: sales@atiaudio.com | www.ATIaudio.com